1B230K9 Test Manual

Links to Other Documents

Technical Bulletin: *http://www.rmspl.com.au/handbook/1b230.pdf*

User Guide: *http://www.rmspl.com.au/userguide/1b230_user_guide.pdf*

Application: *http://www.rmspl.com.au/solutions/1b230_application.pdf*

Acad Case Drawings: *http://www.rmspl.com.au/1b230acad.htm*

Test Certification

This is to certify that the equipment detailed below has been manufactured, inspected & tested in accordance with a Quality System which complies with the requirements of AS/NZS ISO9001-2000.

Order Number	Serial Number

1.0 HARDWARE SPECIFICATIONS – 1B230K09 [A][B][A][B][B][B][B][B][S]

1.1	**Auxiliary Supply**		
	Auxiliary Supply Voltage	[A]	20 - 70 VDC
1.2	**Counter**		
		[B]	Fitted
1.3	**Series Initiate Input**		
		[A]	Not required
1.4	**Status Input 4**		
	CB Auxiliary Switch	[B]	24 - 80 V AC/DC
1.5	**Status Input 5**		
	Drive To Lockout + Reset Lockout	[B]	24 - 80 V AC/DC
1.6	**Status Input 6**		
	Line Volt Monitor	[A]	24 – 80 V AC/DC
1.7	**Status Input 7**		
	Spring Charge + Safe To Close	[B]	24 - 80 V AC/DC
1.8	**Status Input 8**		
	Main Protection Shunt	[B]	24 - 80 V AC/DC
1.9	**Non-Standard Features**		
	Hardware specifications not described in Data Sheet.	[S]	Dead Time 1&2 = 1 - 30s

2.0 VERIFICATION

This is to certify that the equipment has been manufactured, inspected and tested in accordance with a Quality System, which complies with the requirements of ISO9001: 2000.

Testing has been carried out against the declared performance specification 151-230-800 and in accordance with the relevant International (IEC) Standards.

PASSED BY	DATE

3.0 CONNECTION DIAGRAM

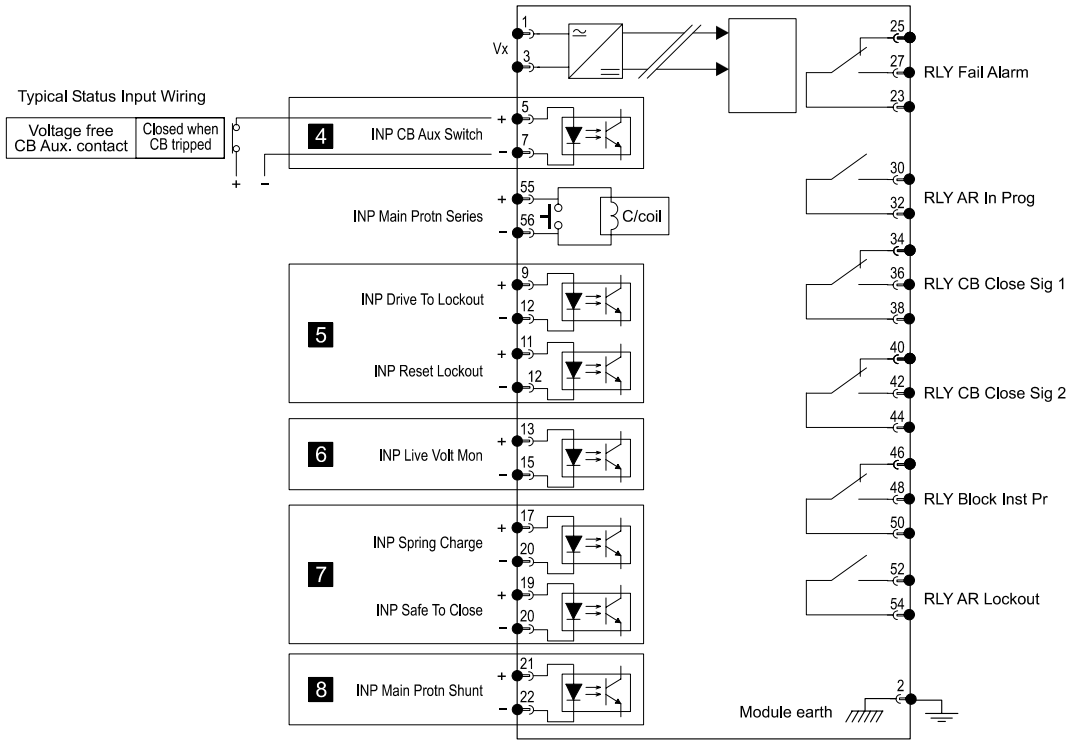

1B230 wiring diagram - Relay shown in de-energised condition